An explicit approach for modelling closed pipes in water networks

Paul F. Boulos

Department of Computer Aided Engineering, Montgomery Watson, Pasadena, CA, USA

Tom Altman

Department of Computer Science and Engineering, University of Colorado, Denver, CO, USA

An explicit approach has been developed for use in modelling closed pipes in water distribution networks. The explicit approach is able to directly incorporate the zero-flow effect of closed pipes into the overall network modelling process. The resulting method is based on an analytical reformulation of the quasilinear set of flow continuity and energy equations governing the network hydraulics in terms of energy displacement for the individual closed pipes that exactly meet the corresponding zero-flow boundary constraint imposed. The proposed algorithm is shown to be robust and efficient, and is guaranteed to converge in an expeditious manner. The method compares favorably with others by eliminating numerical diffusion and computational instability or repetitive network topology alterations suffered by the previous procedures. An example application is presented. Enhancement of mathematical modelling of water distribution networks is a principal benefit of this methodology.

Keywords: water distribution, network modelling algorithms, closed pipes

Introduction

Improving water distribution system operation, capability, and performance has always been and continues to be a major challenge for many practicing engineers. Meeting this challenge requires a comprehensive network modelling capability that ensures an adequate level of service throughout the distribution system for a range of network loading and operational conditions. This includes meeting the residential, commercial, industrial, and emergency (e.g., fire flow) demand requirements reliably, maintaining flow velocities and service system pressures within specified limits of operation, and managing storage to balance the supply and distribution. During the past few decades, highly sophisticated computer-based models have emerged for use in modelling water distribution systems.[1–22] These models can be used to predict flows and pressures (residual heads) in response to a specified set of stationary or time-varying boundary (loading and operating) conditions. However, simulating closed pipes in distribution systems requires special handling procedures for satisfying the corresponding zero-flow boundary constraint added.

The open–closed status of pipes in water distribution systems can be controlled by several means: static valves (e.g., circular and square gate valves, globe valves, needle valves, ball valves, butterfly valves) fully opened or closed; dynamic valves (e.g., pressure-reducing valves, back pressure valves, check valves) closing under reverse flow condition; altitude valves closing pipes leading to storage tanks when the water surface levels exceed the tanks upper or lower limits of operation; pressure switches bringing booster pumps on or off line when the pressures at designated locations drop below or rise above specified values, respectively; multiple supply sources going on–off line; and daily pump scheduling policy are only a few examples.

Closed pipes should have exactly zero flow through them. In modelling, this boundary constraint may normally be enforced by setting the pipe resistances high (e.g., hypothetically small-diameter pipes). Although such an approach is straightforward in application, the method may lead not only to ill-conditioned matrices with a high level of instability but may also result in an

Address reprint requests to Dr. Boulos at the Dept. of Computer Aided Engineering, Montgomery Watson, 301 N. Lake Ave., Suite 900, Pasadena, CA 91101, USA.

Received 10 June 1992; revised 3 December 1992; accepted 4 December 1992

erroneous solution for the energy displacements across the closed pipes. One way to circumvent this problem is to use a more rigorous graph-theoretical approach. In this case, all closed pipes encountered are removed from the distribution system, and the network structure and associated hydraulic equations are redefined. However, such an approach tends to be computationally complex especially when analyzing large networks under time-varying conditions with a number of pipes exhibiting repetitive changes as to their open–closed switching status. Such a complexity increases for network reliability considerations (as a function of hydraulic failures) pertaining to its ability to sustain the failure of any single component in the system (e.g., a pump, a pipe, a valve) under various demand-loading scenarios. As a result, a robust and efficient, yet numerically explicit, method is highly desirable.

This paper presents an explicit approach for modelling closed pipes in water distribution systems. The proposed approach is able to directly incorporate the zero-flow effects of closed pipes into the overall network modelling process without any alterations to the network structure. The resulting problem formulation is cast analytically as a boundary value problem and produces an exact solution for the energy displacements across the closed pipes under zero-flow conditions. The proposed method can accommodate all types of network configurations as long as the system is topologically connected. It is shown to be both robust and efficient, and guaranteed to converge in an expeditious manner. Such an approach will greatly enhance the reliability and computational efficiency of mathematical models of water distribution networks. The developed method is illustrated through an example application.

Network definition

A distribution network may be represented by a directed connected graph comprising a finite number of interconnected elements. A graph element consists of an oriented edge and its two distinct endpoints. Each edge has a defined length, diameter, roughness, and material. Edges may contain pumps (or any other hydraulic component whose head-flow rate functional characteristic is known) and fittings, such as bends, meters, and valves, where concentrated energy dissipation occurs. The endpoints of each edge are identified as either junction or fixed-grade nodes. A *junction node* is a point of intersecting edges and it can also be a point of external consumption where flow can enter or exit the network. A *fixed-grade node* is a point of known energy grade such as a connection to a well, a treatment plant, a reservoir, an elevated storage facility, or a constant-pressure region. The network is rooted at any fixed-grade node, which is then referred to as the *datum node*.

The edge-node connectivity uniquely defines the network topology with all independent circuits being identified (once a spanning tree has been determined). Each circuit is defined as either a fundamental or a pseudocircuit. A *fundamental circuit* is a closed sequence of connected edges that uniquely contains exactly one edge that no other circuit possesses. A *pseudocircuit* is a simple path of connected edges between the datum node and any other fixed-grade node. A *simple path* is a path in which no node is traversed more than once. A detailed description of various algorithms for the construction of these circuits has been provided previously.[23] For a connected graph containing e edges, n junction nodes, and s fixed-grade nodes, the number of pseudocircuits p is $s - 1$ and the number of fundamental circuits l is defined by the Euler relation

$$l = e - n - s + 1 \tag{1}$$

Mathematical formulation

Figure 1 shows an example network that will be used to illustrate the method of solution and the more general mathematical formulation of the problem. The sample network comprises six directed edges $(e_1,e_2,e_3,e_4,e_5,e_6)$, four junction nodes (n_1,n_2,n_3,n_4), one fixed-grade node (s_1), and two fundamental circuits. The fundamental circuits consist of the sequence of edges (e_2,e_6,e_3) and (e_4,e_5,e_6). There are two main physical laws governing the hydraulic behavior of the distribution network. Continuity implies that for each junction node we have

$$\sum_{i=1}^{e} \lambda_{j,i} Q_i + q_j = 0; \quad \lambda_{j,i} \in \{-1,0,1\} \text{ and } j = 1,\ldots,n \tag{2}$$

or in more compact form

$$[\Lambda]\{Q\} + \{q\} = \{0\} \tag{3}$$

which asserts that at each junction node, the sum of inflows ($\lambda_{j,i} = -1$) or outflows ($\lambda_{j,i} = 1$) must be zero. Here, Q is the edge flow rate and q is the external junction demand (negative if inflow). For the example shown in *Figure 1*, the continuity equations are

$$\begin{bmatrix} -1 & 1 & 1 & 0 & 0 & 0 \\ 0 & -1 & 0 & 1 & 1 & 0 \\ 0 & 0 & 0 & -1 & 1 & 0 \\ 0 & 0 & -1 & 0 & -1 & -1 \end{bmatrix} \begin{Bmatrix} Q_1 \\ Q_2 \\ Q_3 \\ Q_4 \end{Bmatrix} + \begin{Bmatrix} q_1 \\ q_2 \\ q_3 \\ q_4 \end{Bmatrix} = \begin{Bmatrix} 0 \\ 0 \\ 0 \\ 0 \end{Bmatrix} \tag{4}$$

The balance of mechanical energy implies that along each fundamental or pseudocircuit, the algebraic sum of energy displacements must equal zero or the difference in energy grade between the two boundary nodes, respectively. That is

$$\sum_{i=1}^{e} \gamma_{m,i} \psi_i + \phi_m = 0; \gamma_{m,i} \in \{-1,0,1\} \quad \text{and } m = 1,\ldots,l + s - 1 \tag{5}$$

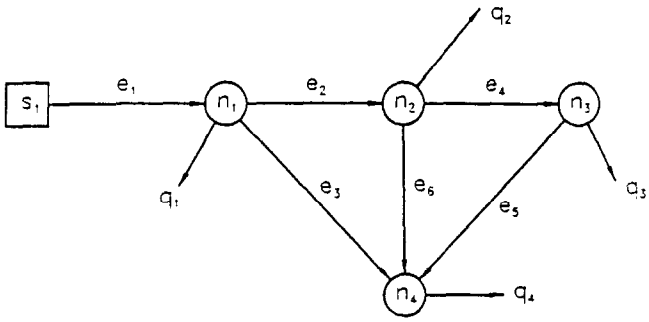

Figure 1. Example of network.

or in more compact form

$$[\Gamma]\{\psi\} + \{\phi\} = \{0\} \tag{6}$$

where ϕ is zero for fundamental circuits. The energy displacement is considered positive ($\gamma_{m,i} = 1$) when the edge orientation goes with the circuit orientation. For the example network, the two fundamental circuit equations are

$$\begin{bmatrix} 0 & 1 & -1 & 0 & 0 & 1 \\ 0 & 0 & 0 & 1 & 1 & -1 \end{bmatrix} \begin{Bmatrix} \psi_1 \\ \psi_2 \\ \psi_3 \\ \psi_4 \\ \psi_5 \\ \psi_6 \end{Bmatrix} = \begin{Bmatrix} 0 \\ 0 \end{Bmatrix} \tag{7}$$

Observe that there are no pseudocircuits, i.e., $p = 0$. For each edge, the energy displacement variable, ψ, is a nonlinear characteristic function of the edge flow rate and is given by[24]

$$\psi = \xi Q^{\sigma} + \zeta Q^2 - \eta^2 \left(\alpha - \frac{\beta}{\eta^{\nu}} Q^{\nu} \right) \tag{8}$$

where ξ is the frictional edge resistance; σ is an exponent that depends on the energy displacement expression used, $\sigma \epsilon [1.8, 2.0]$; ζ is the minor loss resistance to fittings and valves; α is the pump cutoff head at zero flow condition; β and ν are the regression coefficient and the exponent of the pump characteristic curve, respectively; and η is the ratio of the pump rotational speed to the pump reference speed. If the Hazen–Williams head loss equation is used, the frictional edge resistance constant can be expressed as

$$\xi = \frac{10.69\, L}{C^{\sigma} D^{4.87}} \tag{9}$$

where L is the edge length in meters, C is the Hazen–Williams coefficient of roughness, D is the edge diameter in meters, and σ is 1.852.

Equations (3) and (6) can be paired to define the analytical flow distribution problem as

$$\{F(\{Q\})\} = \begin{Bmatrix} [\Lambda]\{Q\} + \{q\} \\ [\Gamma]\{\psi\} + \{\phi\} \end{Bmatrix} = \{0\} \tag{10}$$

whose solution gives the network flow distribution vector $\{Q\}$. This is based on the assumption that all edges are open. For the example network, the set of equation (10) gives

$$\begin{aligned} -Q_1 + Q_2 + Q_3 + q_1 &= 0 \\ -Q_2 + Q_4 + Q_5 + q_2 &= 0 \\ -Q_4 + Q_5 + q_3 &= 0 \\ -Q_3 - Q_5 - Q_6 + q_4 &= 0 \\ \xi_2 Q_2^{\sigma} - \xi_3 Q_3^{\sigma} + \xi_6 Q_6^{\sigma} &= 0 \\ \xi_4 Q_4^{\sigma} + \xi_5 Q_5^{\sigma} - \xi_6 Q_6^{\sigma} &= 0 \end{aligned} \tag{11}$$

The simultaneous solution of this system of quasilinear algebraic equations can be obtained iteratively using the Newton method. The iterations continue until the relative change in flow rates between two successive iterates is less than a specified tolerance. The energy grade at each junction node can then be computed by starting at the datum node and proceeding into the network while adding or subtracting energy grade changes based on the solution for edge flow rates.[19,22,25,26]

Mathematical model

A model of a distribution network containing one or more closed edges must be capable of simulating the zero-flow effect associated with these edges. This boundary constraint can normally be enforced by setting the resistance (ξ or ζ) of closed edges to a very large number. A value of 10^5 was previously suggested.[27] Despite the simplicity of such an explicit yet approximate method, numerical difficulties such as computational instability are often encountered. Furthermore, erroneous solutions for the energy displacement across the closed edges may be obtained. As a result, care must be taken when determining the nodal grade distribution through the system. Specifically, only the open edges are considered in the procedure described in the previous section. One way to circumvent these problems is to use a more rigorous analytical procedure. Obviously, an exact method for modeling closed edges is simply to remove them from the network graph. It is assumed that the resulting reduced graph remains connected. This method will be referred to as network reducibility. The topological matrices $[\Lambda]$ and $[\Gamma]$ derived from the structure of the reduced graph can then be constructed and equation (10) formulated and solved accordingly. However, such an approach may not be computationally appealing for network reliability issues or analyzing large networks under time-varying conditions with a number of hydraulic components exhibiting open–closed operational oscillations. As a result, an alternative approach is investigated.

The objectives that guided the development of the proposed model are twofold. The first objective is to produce a model that exactly reflects the imposition of the zero-flow constraint associated with the closed edges while maintaining the network structure unaltered. The second objective is to provide an explicit methodology with minimal computational overhead.

The foregoing approach permits the direct inclusion of closed edges into the overall modeling process without any alterations to the network structure. It is based on an explicit interchange of network variables. The method is developed by casting the quasilinear set of flow continuity and energy equations in terms of unknown energy displacement (as opposed to edge flow rate) for the individual closed edges that exactly meet the zero-flow boundary constraint imposed. In formulating the system modelling problem, a vector of energy displacement is introduced as a decision variable for direct calculation. The dimension of this vector is the number of closed edges specified. The remaining unknowns represent the flow rates for the open edges. The null-flow boundary constraint is enforced from the continuity relation. Each closed edge is removed from continuity consideration, resulting in a column of zeros in $[\Lambda]$ for that edge. It should be noted that the topological matrix $[\Gamma]$ remains unchanged. The resulting boundary value problem is hydraulically identical to the exact method of network reducibility. Again, it is assumed that the network structure remains connected.

For our running example, assume that edges 5 and 6 are closed. The resulting analytical boundary value problem can be expressed as

$$\begin{aligned} -Q_1 + Q_2 + Q_3 + q_1 &= 0 \\ -Q_2 + Q_4 + q_2 &= 0 \\ -Q_4 + q_3 &= 0 \\ -Q_3 + q_4 &= 0 \\ \xi_2 Q_2^\sigma - \xi_3 Q_3^\sigma + \psi_6 &= 0 \\ \xi_4 Q_4^\sigma + \psi_5 - \psi_6 &= 0 \end{aligned} \tag{12}$$

whose solution gives the exact values for the flow rates through edges 1, 2, 3, and 4 and the energy displacements across edges 5 and 6.

Model solvability

Let G be a connected directed graph of the network with n junction nodes, s fixed-grade nodes, and e edges.

Observation 1. The ranks of $[\Lambda]$ and $[\Gamma]$ are n and $e - n$, respectively; moreover, the e by e $[M] = \left[\begin{smallmatrix}[\Lambda] \\ [\Gamma]\end{smallmatrix}\right]$ is nonsingular. For proofs of the above, the reader is referred to Boulos and Altman.[22]

Let $[\Lambda] = [[\Lambda_1]\ [\Lambda_2]]$ and $[\Gamma] = [[\Gamma_1]\ [\Gamma_2]]$, where $[\Lambda_1]$ and $[\Gamma_1]$, are n by n and $e - n$ by n matrices and $[\Lambda_2]$ and $[\Gamma_2]$ are n by $e - n$ and $e - n$ by $e - n$ matrices, respectively. Let us put the matrix $[M]$ into the following form

$$[M] = \begin{bmatrix} [\Lambda_1] & [\Lambda_2] \\ [\Gamma_1] & [\Gamma_2] \end{bmatrix} \tag{13}$$

where the n columns of $[\Lambda_1]$ and $[\Gamma_1]$ correspond to the edges of the spanning tree over the junction nodes of G and the datum-to-first-junction-node edge; the $e - n$ columns of $[\Lambda_2]$ and $[\Gamma 2]$ correspond to the remaining $s - 1$ edges, i.e., the connections between junction and fixed-grade nodes, and the nontree edges.

Observation 2. The first n rows (junction nodes) and columns (edges) of $[M]$ may always be permuted so that $[\Lambda_1]$ is a matrix with ± 1's on its diagonal.

Observation 3. The remaining $e - n$ rows and columns of $[M]$ may always be permuted so that $[\Gamma_2]$ is a diagonal matrix with 1's on its diagonal.

Proof. Starting with the fixed-grade tree edges, place each nonjunction tree edge associated with the ith row of $[\Gamma_2]$ in column $n + i$.

Now, the matrix $[M]$ has the following form

$$[M] = \begin{bmatrix} [\Lambda_{11}] & [\Lambda_{12}] & [\Lambda_{13}] \\ [\Gamma_{11}] & [\Gamma_{12}] & [\Gamma_{13}] \\ [\Gamma_{21}] & [\Gamma_{22}] & [\Gamma_{23}] \end{bmatrix} \tag{14}$$

where $[\Lambda_{11}]$, $[\Lambda_{12}]$, $[\Lambda_{13}]$ represent the continuity equations over the junction tree edges, fixed-grade tree edges, and nontree edges, respectively; $[\Gamma_{11}]$, $[\Gamma_{12}]$, $[\Gamma_{13}]$ represent the pseudocircuits over the same edges; and $[\Gamma_{21}]$, $[\Gamma_{22}]$, $[\Gamma_{23}]$ represent the fundamental circuits. Note that $[\Gamma_{13}]$ and $[\Gamma_{22}]$ are zero matrices of dimensions $(s - 1)$ by $(e - n - s + 1)$ and $(e - n - s + 1)$ by $(s - 1)$, respectively. The matrix $[\Lambda_{11}]$ has ± 1's on its diagonal, and $[\Gamma_{12}]$ and $[\Gamma_{23}]$ are identity matrices of size $(s - 1)$ and $(e - n - s + 1)$, respectively. The structure of $[M]$ can be seen more clearly in *Figure 2*.

Observation 4. If any column of $[\Lambda_{13}]$ in $[M]$ is set to zero, the resulting matrix remains nonsingular.

Proof. Without loss of generality, assume that the last column of $[\Lambda_{13}]$ is set to zero; otherwise, we can permute the nontree edges, i.e., columns, and fundamental circuits, i.e., rows of $[M]$, accordingly. Note that by Observation 1 the $(e - 1)$ by $(e - 1)$ matrix $[M']$ consisting of one less edge (the last column of $[M]$) and one less fundamental circuit (the last row of $[M]$) is nonsingular. Augmenting $[M']$ with the last row of $[M]$ and a zero column on the right side (with a 1 in the corner position) is equivalent to adding one equation with an unknown that does not appear in any of the equations of $[M']$. Because $[M']$ is nonsingular, the augmented matrix is nonsingular as well.

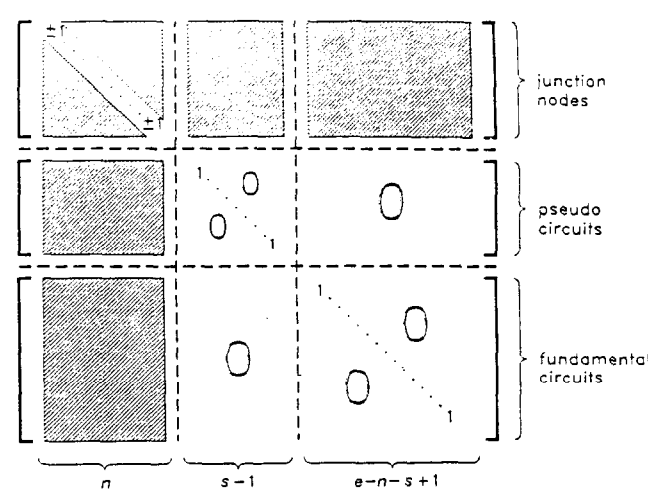

Figure 2. Structure of the matrix [M].

From Observation 4, it follows that setting to zero any number of columns in $[\Lambda_{13}]$ leaves the matrix nonsingular. In fact, the above is true if any of the columns (edges) from $[\Lambda_{12}]$ were set to zero. Hence, the closing of any number of the nonjunction tree pipes by setting to zero the appropriate columns in $[\Lambda_{12}]$ and/or $[\Lambda_{13}]$ does not affect the nonsingularity of $[M]$.

Now let us observe the effects of setting to zero a column of $[\Lambda_{11}]$, that corresponds to an edge, say u, that is part of the junction tree. Because the new graph must be connected, there must exist at least one nontree edge, say v, in $[\Gamma_{23}]$ guaranteeing that the new graph is still connected. Again, w.l.g., assume that v corresponds to the last (rightmost) column of $[M]$. Permuting the rows/columns corresponding to u and v will place the column corresponding to v among the junction tree edges and make the column corresponding to u the rightmost column of the new $[M]$. Note that such interchange will destroy not only the diagonal matrix property of $[\Gamma_{23}]$, but the resulting submatrix will not even be triangular. In addition, the last column of $[\Gamma_{13}]$ may no longer be zero. The new (permuted) matrix $[M]$ will be denoted by $[N]$.

Observe that the rightmost entry in the last row of $[N]$ is ± 1. Hence, through a sequence of appropriate algebraic operations (addition or subtraction of the last row) the entries $(n + 1)$ through $(e - n - 1)$ in the last column of $[N]$ will now be set to zero.

Observation 5. If any column of $[\Lambda_{13}]$ in the (nonsingular) matrix $[N]$ is set to zero, the resulting matrix remains nonsingular.

Proof. Let $[N']$ be an $(e - 1)$ by $(e - 1)$ matrix consisting of one less edge, the last column of $[N]$, and one less continuity equation, the last row of $[N]$. Augmenting $[N']$ with the last row of $[N]$ and a zero column on the right side (with either $+1$ or -1 in the corner position) is equivalent to adding one equation with an unknown that does not appear in any of the equations of $[N']$. Because $[N']$ is nonsingular, the augmented matrix is nonsingular.

The next theorem can now be stated without proof.

Theorem 1. If the removal of an edge does not disconnect the graph, setting the corresponding column of $[\Lambda]$ to zero will not affect the nonsingularity of $[M]$.

Numerical results

Justification for the use of any algorithm rests on its efficiency and stability to solve problems by means of a computer implementation. The proposed method has been integrated into COPIPE, the University of Colorado hydraulic network simulator,[28] and successfully used to test a number of actual water distribution networks of various sizes. These range in size from a few nodes to over 1500 nodes. The method is illustrated by using two example networks. SI units and the Hazen–Williams head loss equation are used in these examples.

Example 1

Our running example network is used herein. *Table 1* summarizes the pertinent pipe system characteristics. Fixed-grade node s_1 corresponds to a reservoir with a water level of 120 m.

The sample network provides the means to illustrate the proposed approach for a wide variety of situations. A hydraulic analysis of the original data was carried out along with eight additional cases. Each case represents the closing of a single pair of edges that still leaves the network connected. We consider all possible combinations of these pairs. The pairs of closed edges considered are (2,4), (2,5), (2,6), (3,4), (3,5), (3,6), (4,6), and (5,6). The solution for edge flow rates and junction node grades are given in *Tables 2* and *3*,

Table 1. Pipe system characteristics (Example 1).

Pipe number	Length (m)	Diameter (mm)	Roughness coefficient	Minor loss	Node number	Demand (l/sec)
1	600.0	600.0	130.0	0.0	1	60.0
2	400.0	500.0	130.0	0.0	2	80.0
3	500.0	400.0	130.0	0.0	3	40.0
4	400.0	500.0	130.0	0.0	4	120.0
5	500.0	400.0	130.0	0.0		
6	300.0	400.0	130.0	0.0		

Table 2. Computational results: Pipe flow rates (Example 1).

Pipe number	Original	Pair (2,4)	Pair (2,5)	Pair (2,6)	Pair (3,4)	Pair (3,5)	Pair (3,6)	Pair (4,6)	Pair (5,6)
1	300.00	300.00	300.00	300.00	300.00	300.00	300.00	300.00	300.00
2	157.67	0.00	0.00	0.00	240.00	240.00	240.00	80.00	120.00
3	82.53	240.00	240.00	240.00	0.00	0.00	0.00	160.00	120.00
4	46.22	0.00	40.00	−80.00	0.00	40.00	160.00	0.00	40.00
5	6.22	−40.00	0.00	−120.00	−40.00	0.00	120.00	−40.00	0.00
6	31.45	−80.00	−120.00	0.00	160.00	120.00	0.00	0.00	0.00

Table 3. Computational results: Junction node grades (Example 1).

Pipe number	Original	Pair (2,4)	Pair (2,5)	Pair (2,6)	Pair (3,4)	Pair (3,5)	Pair (3,6)	Pair (4,6)	Pair (5,6)
1	118.99	118.99	118.99	118.99	118.99	118.99	118.99	118.99	118.99
2	118.49	114.67	114.32	113.73	117.91	117.91	117.91	118.85	118.69
3	118.44	114.84	114.28	113.87	116.63	117.87	117.40	116.95	118.65
4	118.44	114.98	114.98	114.98	116.77	117.24	116.29	117.10	117.88

respectively. Negative signs for flow rates indicate that the flow is opposite to the assumed direction shown in *Figure 1*. For all the simulation cases investigated, the method converged to the exact solution in two Newton iterations with a convergence tolerance of 0.001.

Example 2

To illustrate the proposed approach on a larger, more complex system, the algorithm was applied to the network shown in *Figure 3*. A numbering scheme is shown for edges and junction nodes along with a labeling scheme for fixed-grade nodes. This network contains 19 edges, 11 junction nodes, 4 fixed-grade nodes, 5 fundamental circuits, and 3 pseudocircuits. The pertinent pipe system characteristics are summarized in *Table 4*. The assumed flow direction for each edge is from the first (head) to the second (tail) node input. The characteristic curve associated with the pump in edge 1 is described by the following parameter values: $\alpha = 160.0$, $\beta = 0.018165$, $\nu = 1.322$, and $\eta = 1.0$. The reservoir and tank levels are given in *Figure 3*. An off-peak period of slack demand is assumed for this problem. Tanks B and C are full and the altitude valves in edges 4 and 11 are closed. Edges 3, 6, and 15 contain check valves that allow flow only in the direction of the node order specified. In case of reverse flow, the valves will close.

Algorithm convergence for the example network was obtained in five Newton trials. The convergence tolerance was set to 0.001. The results are displayed in *Table 5*. As can be seen from *Table 5*, the present results are identical with the exact method of network reducibility.

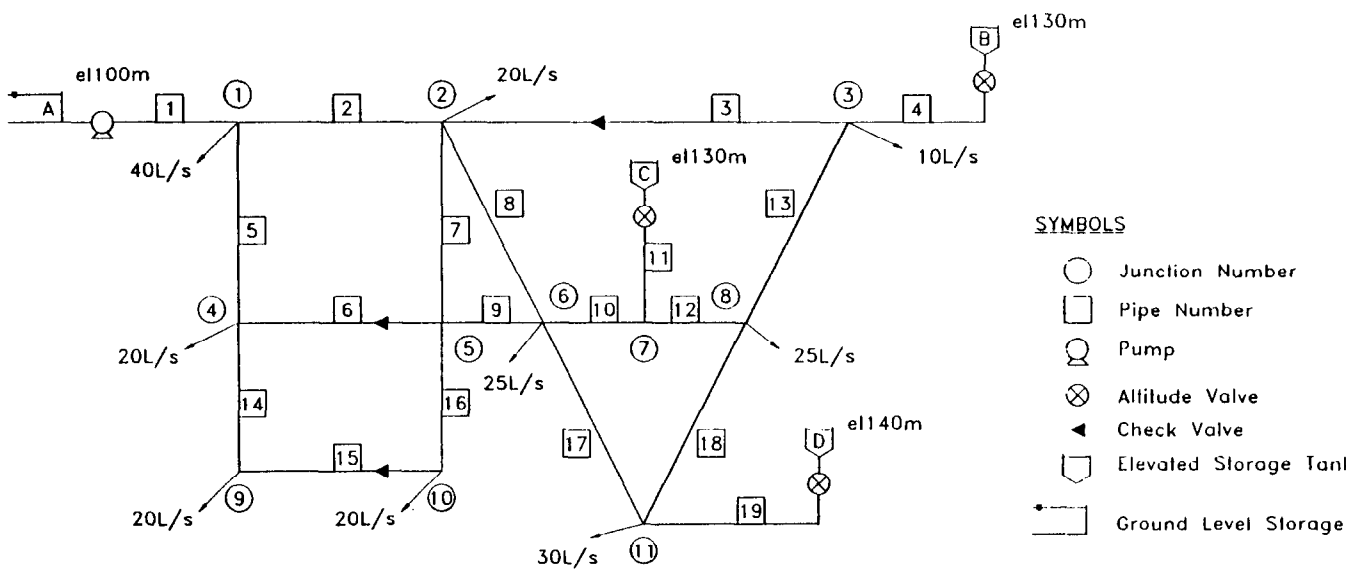

Figure 3. Sample pipe distribution network.

Table 4. Pipe system characteristics (Example 2).

Pipe number	Head node no.	Tail node no.	Length (m)	Diameter (mm)	Roughness coefficient	Minor loss	Node number	Demand (l/sec)
1	A	1	300.0	300.0	130.0	0.0	1	40.0
2	1	2	250.0	250.0	130.0	0.0	2	20.0
3	3	2	450.0	250.0	130.0	0.0	3	10.0
4	3	B	300.0	200.0	130.0	0.0	4	20.0
5	1	4	150.0	250.0	130.0	0.0	5	0.0
6	5	4	250.0	200.0	130.0	0.0	6	25.0
7	2	5	150.0	200.0	130.0	0.0	7	0.0
8	2	6	160.0	200.0	130.0	0.0	8	25.0
9	5	6	56.0	200.0	130.0	0.0	9	20.0
10	6	7	140.0	200.0	130.0	0.0	10	20.0
11	7	C	200.0	250.0	130.0	0.0	11	30.0
12	7	8	80.0	250.0	130.0	0.0		
13	8	3	200.0	250.0	130.0	0.0		
14	4	9	160.0	300.0	130.0	0.0		
15	10	9	250.0	300.0	130.0	0.0		
16	5	10	160.0	300.0	130.0	0.0		
17	6	11	300.0	200.0	130.0	0.0		
18	8	11	300.0	200.0	130.0	0.0		
19	11	D	400.0	250.0	130.0	0.0		

Table 5. Computational results (Example 2).

Flow rate (l/sec)			Grade (m)		
Pipe number	Proposed method	Exact method	Node number	Proposed method	Exact method
1	344.29	344.29	1	199.94	199.94
2	264.29	264.29	2	176.30	176.30
3	0.00	0.00	3	156.93	156.93
4	0.00	0.00	4	199.51	199.51
5	40.00	40.00	5	167.07	167.07
6	0.00	0.00	6	164.64	164.64
7	116.57	116.57	7	158.21	158.21
8	127.73	127.73	8	156.97	156.97
9	96.57	96.57	9	199.46	199.46
10	99.52	99.52	10	167.02	167.02
11	0.00	0.00	11	150.79	150.79
12	99.52	99.52			
13	10.00	10.00			
14	20.00	20.00			
15	0.00	0.00			
16	20.00	20.00			
17	99.77	99.77			
18	64.52	64.52			
19	134.29	134.29			

Conclusion

An explicit algorithm has been presented for use in modelling closed pipes in water distribution networks. The methodology is predicated on an explicit interchange of network variables in the mathematical modeling process describing the network flow hydraulics. By casting the problem in terms of an explicit formulation, numerical convergence difficulties as well as the need for repetitive network topology alterations are avoided. The resulting algorithm is both computationally efficient and guaranteed to converge in an expeditious manner. The method is general and can be easily applied to any connected hydraulic system with nonlinear flow properties.

Acknowledgment

This material is based on work partially supported by the National Science Foundation under grant ECE-861205. The support received is gratefully acknowledged. Acknowledgments are also due to the staff of James M. Montgomery Consulting Engineers, Inc., in particular, John J. Vasconcelos for his assistance in conducting extensive experiments of the developed methodology and to Roger Ro.

References

1 Shamir, U. and Howard, C. D. D. Water distribution systems analysis. *J. Hydraul. Div. Am. Soc. Civ. Eng.* 1968, **94**(1), 219–234

2 Epp, R. and Fowler, A. G. Efficient code for steady state flows in networks. *J. Hydraul. Div. Am. Soc. Civ. Eng.* 1970, **96**(1), 43–46

3 Zarghamee, M. S. Mathematical model for water distribution systems. *J. Hydraul. Div. Am. Soc. Civ. Eng.* 1971, **97**(1), 1–14

4 Kesavan, H. K. and Chandrashekar, M. Graph theoretic models for pipe network analysis. *J. Hydraul. Div. Am. Soc. Civ. Eng.* 1972, **98**(2), 345–364

5 Lam, C. F. and Wolla, M. L. Computer analysis of water distribution systems: part I—formulation of equations. *J. Hydraul. Div. Am. Soc. Civ. Eng.* 1972, **98**(2), 335–344

6 Nahavandi, A. N. and Catanzaro, G. V. Matrix method of analysis of hydraulic networks. *J. Hydraul. Div. Am. Soc. Civ. Eng.* 1973, **99**(1), 47–63

7 Chandrashekar, M. and Stewart, K. H. Sparsity oriented analysis of large pipe networks. *J. Hydraul. Div. Am. Soc. Civ. Eng.* 1975, **101**(4), 341–355

8 Rao, H. S. and Bree, D. W. Extended period simulation of water systems—part A. *J. Hydraul. Div. Am. Soc. Civ. Eng.* 1977, **103**(2), 97–108

9 Rao, H. S., Markel, L. C., and Bree, D. W. Extended period simulation of water systems—part B. *J. Hydraul. Div. Am. Soc. Civ. Eng.* 1977, **103**(3), 281–294

10 Wood, D. J. and Rayes, A. G. Reliability of algorithms for pipe network analysis. *J. Hydraul. Div. Am. Soc. Civ. Eng.* 1981, **107**(10), 1145–1161

11 Jeppson, R. W. *Analysis of Flow in Pipe Networks.* Ann Arbor Science, Ann Arbor, MI, 1981

12 Smith, A. A. Compact formulation of pipe network problems. *Canadian J. Civil Eng.* 1982, **9**, 611–623

13 Ohtmer, O. Nonlinear flow analysis in pipe networks. *Int. J. Numer. Methods Eng.* 1983, **19**, 373–392

14 Walski, T. M. *Analysis of Water Distribution Systems.* Van Nostrand Reinhold, New York, NY, 1984

15 Gessler, J. and Walski, T. M. WADISO—water distribution system optimization. *TREL-11.* WES, Corps of Engineers, Vicksburg, MS, 1985

16 Chuang, Y. T. et al. Analysis of large scale water distribution systems. *Proceedings of the 1987 National Conference on Hydraulic Engineering.* Williamsburg, VA, 1987

17 Bhave, P. R. Extended period simulation of water systems—direct solution. *J. Env. Div. Am. Soc. Civ. Eng.* 1988, **114**(5), 1146–1159.

18 AQUA—Analysis, graphics and data management software for water distribution systems. User manual. Department of Civil Engineering, University of Akron, Akron, OH, 1989

19 Boulos, P. F. and Wood, D. J. Explicit calculation of pipe network parameters. *J. Hydraul. Div. Am. Soc. Civ. Eng.* 1990, **116**(11), 1329–1344

20 Boulos, P. F. and Wood, D. J. KYPIPED: A comprehensive pipe distribution network analyzer. Civil Engineering Software Center, University of Kentucky, Lexington, KY, 1990

21 Bhave, P. R. *Analysis of Flow in Water Distribution Networks.* Technomic Publishing, Lancaster, PA, 1991

22 Boulos, P. F. and Altman, T. A graph-theoretic approach to explicit nonlinear pipe network optimization. *J. Appl. Math. Modelling* 1991, **15**, 459–466

23 Osiadacz, A. J. *Simulation and Analysis of Gas Networks.* E&F Spon Ltd., UK, 1987

24 Boulos, P. F., Altman, T., and Sadhal, K. S. Computer modeling of water quality in large multiple-source networks, *J. Appl. Math. Modelling* 1992, **16**, 439–445

25 Boulos, P. F. and Wood, D. J. An explicit algorithm for calculating operating parameters for water networks. *J. Civil Eng. Syst.* 1991, **8**, 115–122

26 Boulos, P. F. and Ormsbee, L. E. Explicit network calibration for multiple loading conditions. *J. Civil Eng. Syst.* 1991, **8**, 153–160

27 Shamir, U. and Howard, C. D. D. Closure to: Water distribution systems analysis. *J. Hydraul. Div. Am. Soc. Civ. Eng.* 1970, **96**(2), 577–578

28 Boulos, P. F. and Altman, T. COPIPE: Computer analysis of liquid distribution system including extended period simulations. *Department of Computer Science and Engineering*, University of Colorado at Denver, Denver, CO, 1992